Bab 5 Prategangan DC

By : M. Ramdhani

Tujuan Instruksional

- *Mampu menganalisa rangkaian pra-tegangan BJT*

Tegangan-tegangan transistor NPN :

	$V_{CE\ sat}$	$V_{BE\ sat}$	$V_{BE\ aktif}$
Si	0,2	0,8	0,7
Ge	0,1	0,3	0,2

$$V_{BE} = 0,7V$$

$$I_E = (\beta + 1)I_B \approx I_C$$

$$I_C = \beta I_B$$

Prosedur Analisis Prategangan DC :

- Input ac diganti dengan tahanan dalamnya (prinsip superposisi)
- Komponen kapasitor dibuat open circuit
- Buat arus yang sesuai dengan jenis transistor

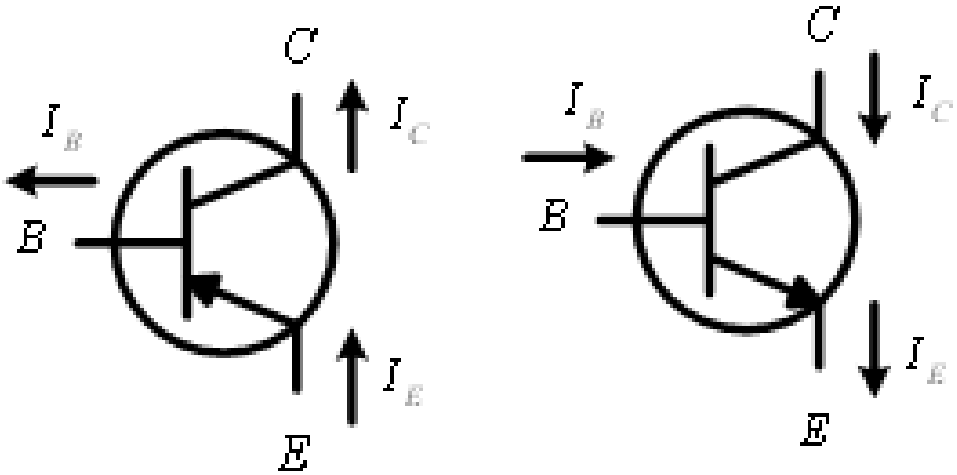

Rangkaian Prategangan Tetap

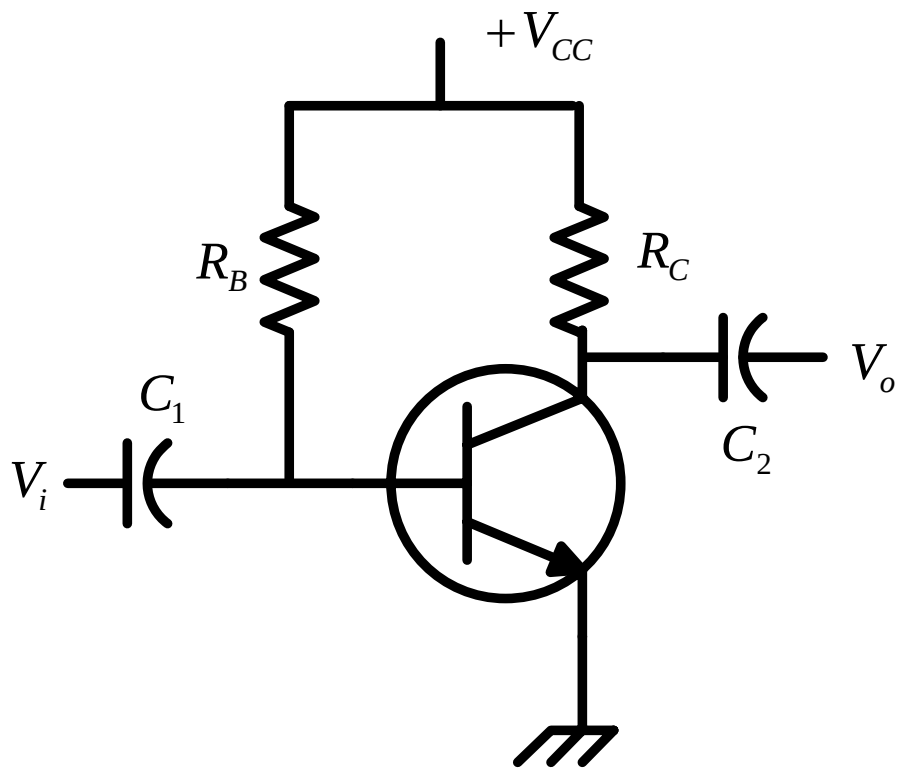

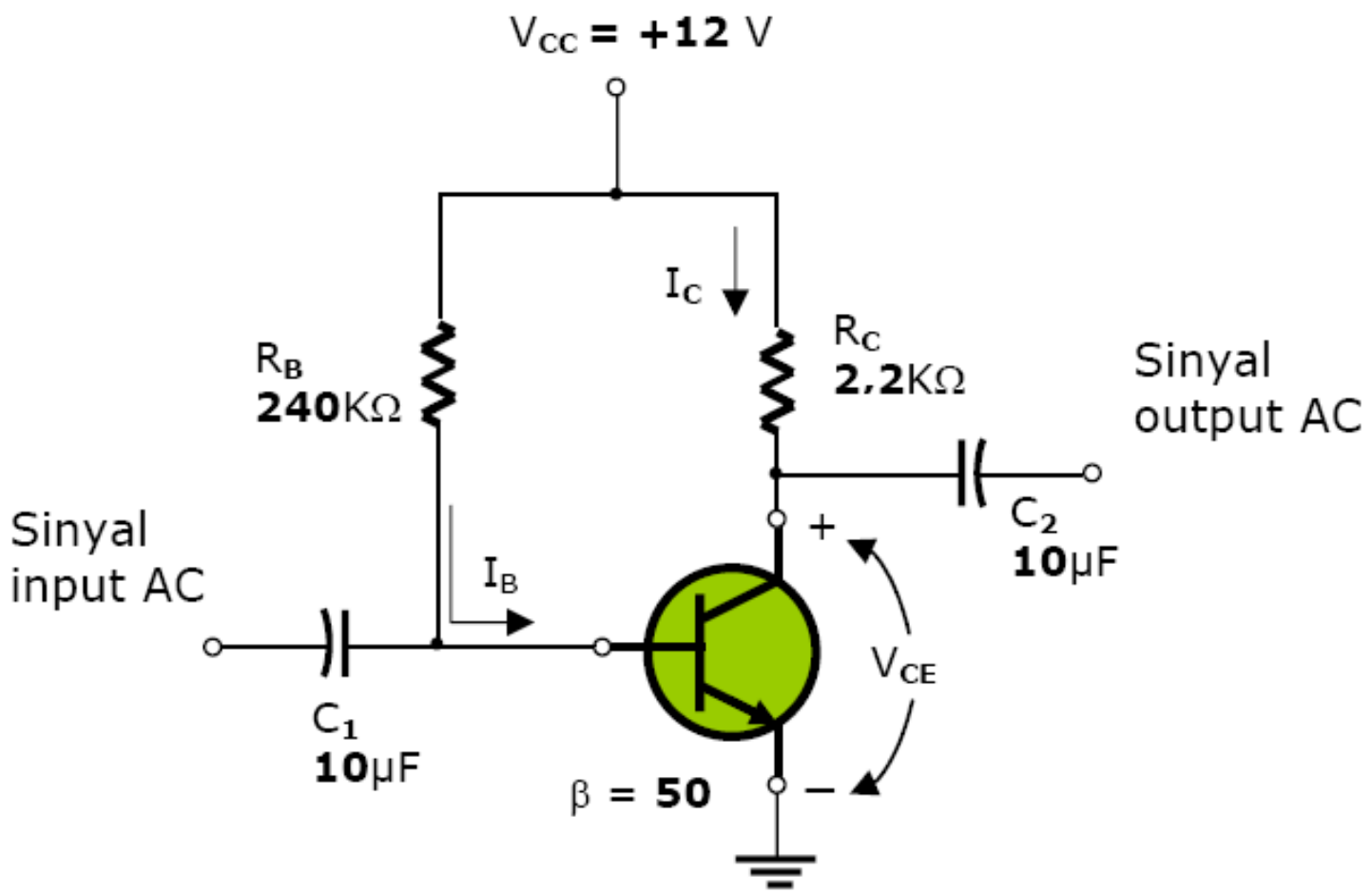
V_{CC} = +12 V
I_C
R_B
240KΩ
R_C
2.2KΩ
Sinyal
output AC
C_2
10μF
Sinyal
input AC
I_B
+
V_{CE}
C_1
10μF
β = 50
–

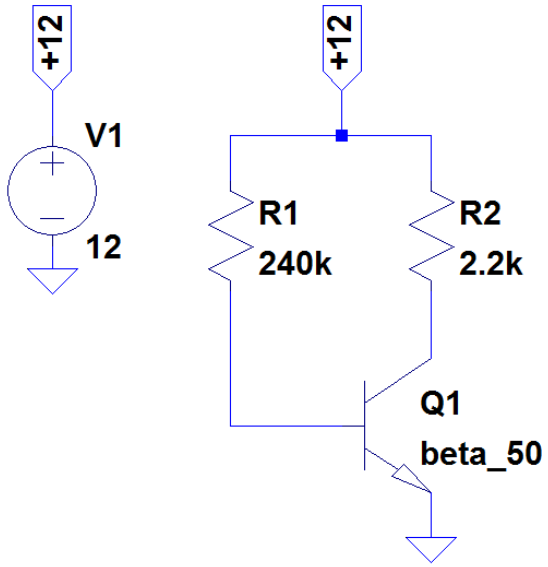


```
       --- Operating Point ---

V(+12):         12              voltage
V(n002):        0.796156        voltage
V(n001):        6.8649          voltage
Ic(Q1):         0.00233416      device_current
Ib(Q1):         4.66833e-005    device_current
Ie(Q1):         -0.00238085     device_current
I(R2):          0.00233413      device_current
I(R1):          4.66827e-005    device_current
I(V1):          -0.00238082     device_current
```

Rangkaian Prategangan Penstabil Emitor

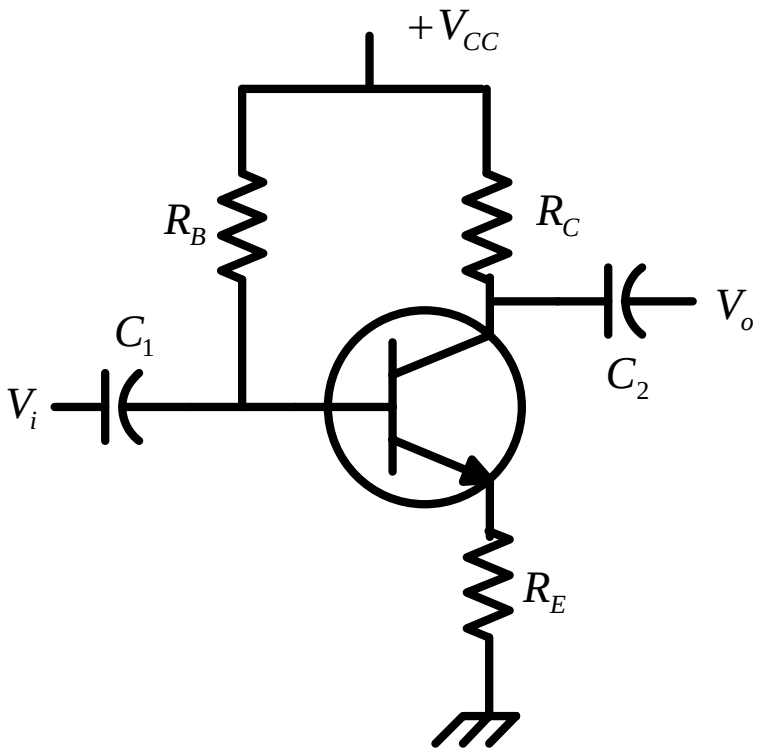

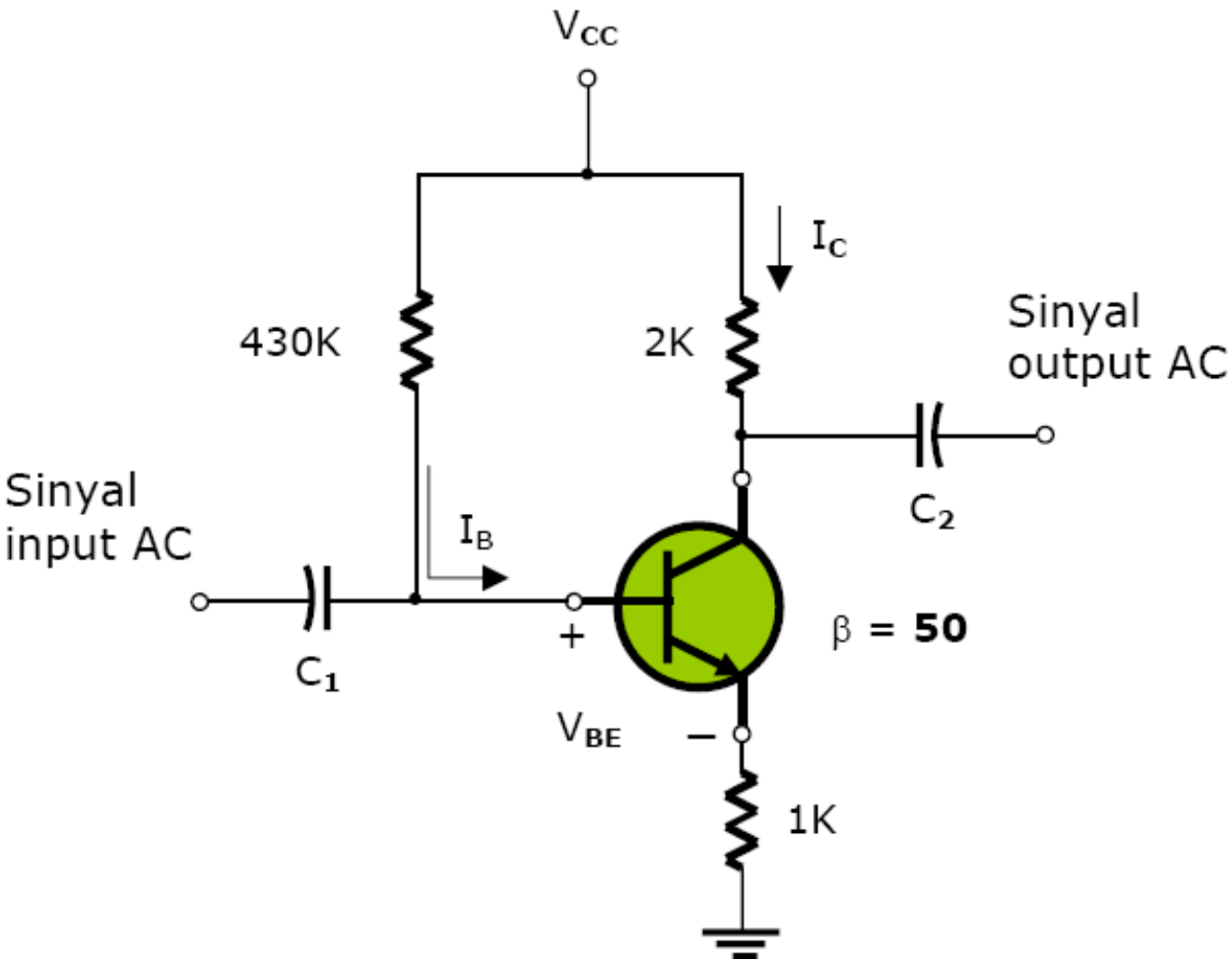
V_{CC}
I_C
430K
2K
Sinyal output AC
C_2
Sinyal input AC
I_B
C_1
+
V_{BE}
−
β = 50
1K

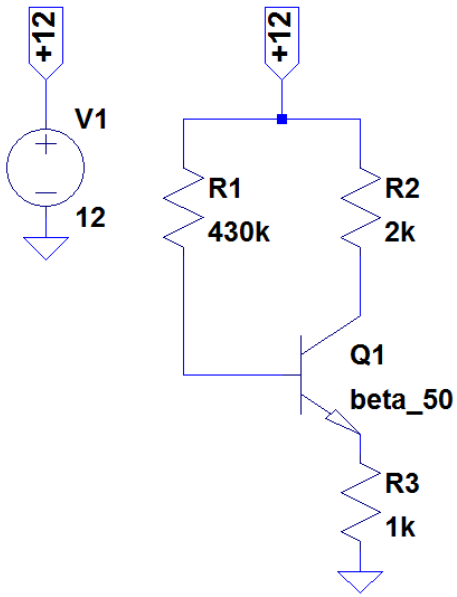


```
       --- Operating Point ---

V(+12):         12              voltage
V(n002):        1.96805         voltage
V(n001):        9.66699         voltage
V(n003):        1.18984         voltage
Ic(Q1):         0.00116651      device_current
Ib(Q1):         2.33301e-005    device_current
Ie(Q1):         -0.00118984     device_current
I(R3):          0.00118984      device_current
I(R2):          0.00116651      device_current
I(R1):          2.33301e-005    device_current
I(V1):          -0.00118984     device_current
```

Rangkaian Prategangan Sendiri/ Pembagi Tegangan

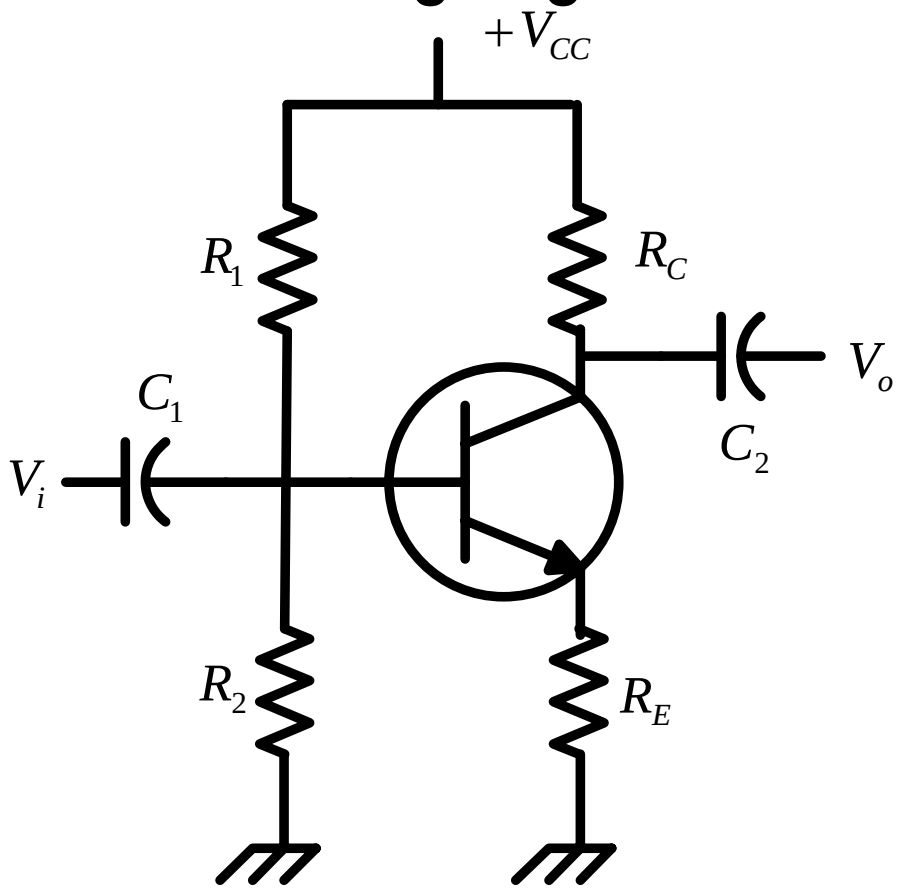

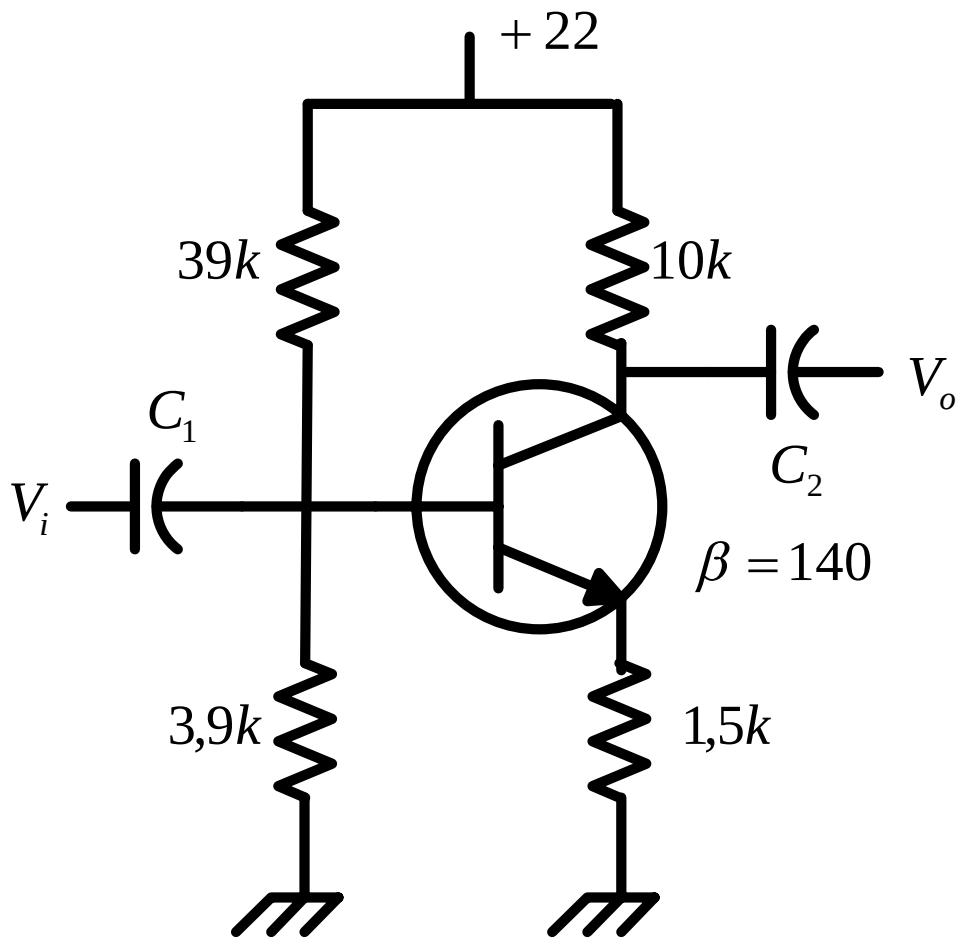
+22
39k
10k
C1
Vo
C2
Vi
β = 140
3,9k
1,5k

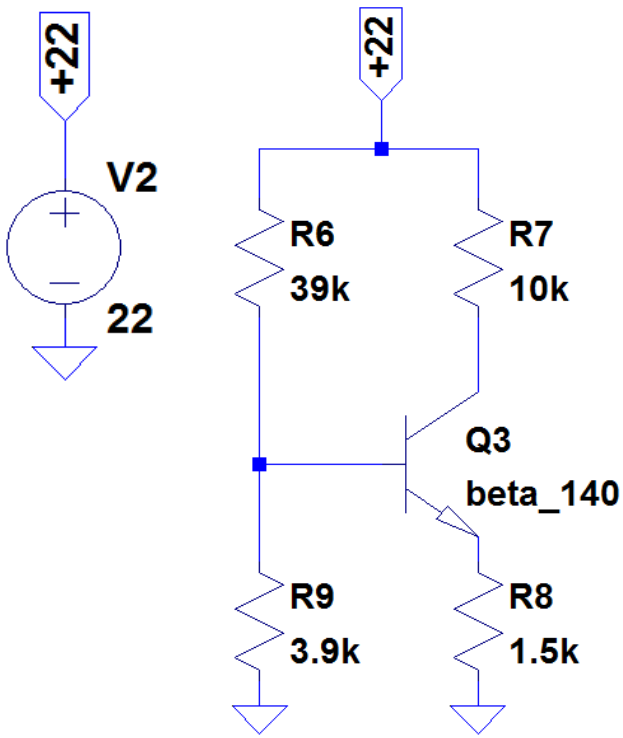


```
--- Operating Point ---

V(+22):        22              voltage
V(n002):       1.9797          voltage
V(n001):       13.9827         voltage
V(n003):       1.21118         voltage
Ic(Q1):        0.00080175      device_current
Ib(Q1):        5.72678e-006    device_current
Ie(Q1):        -0.000807477    device_current
I(R4):         0.000507615     device_current
I(R3):         0.000807454     device_current
I(R2):         0.000801727     device_current
I(R1):         0.000513341     device_current
I(V1):         -0.00131507     device_current
```

Prategangan DC Collector ke Basis / Umpan Balik

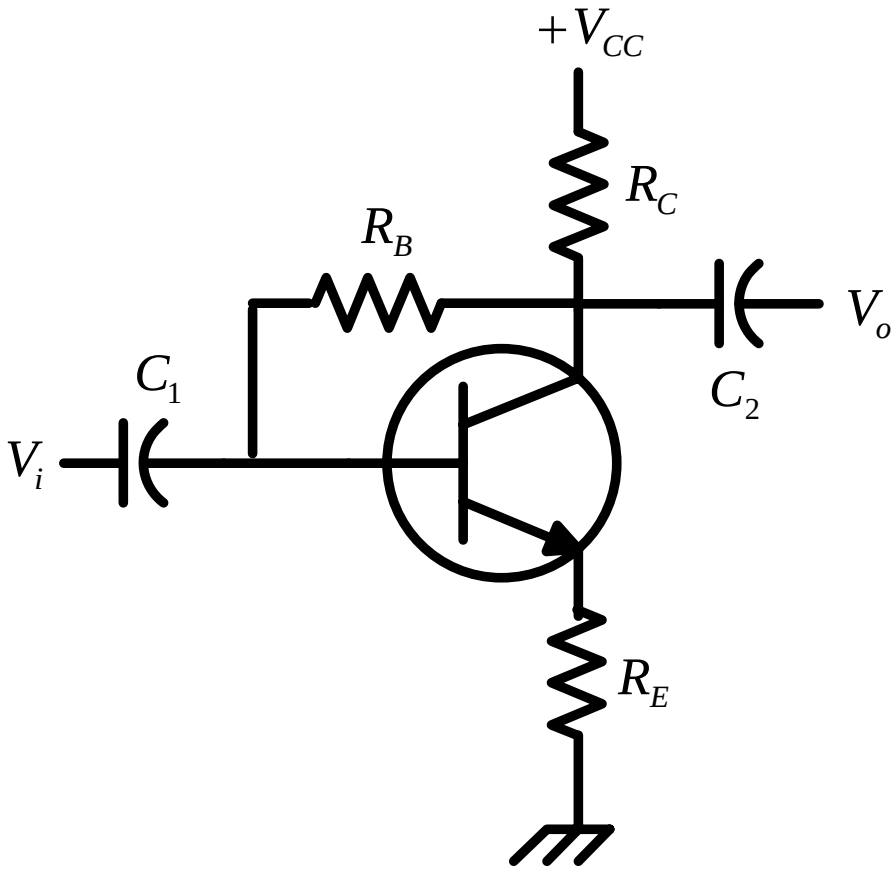

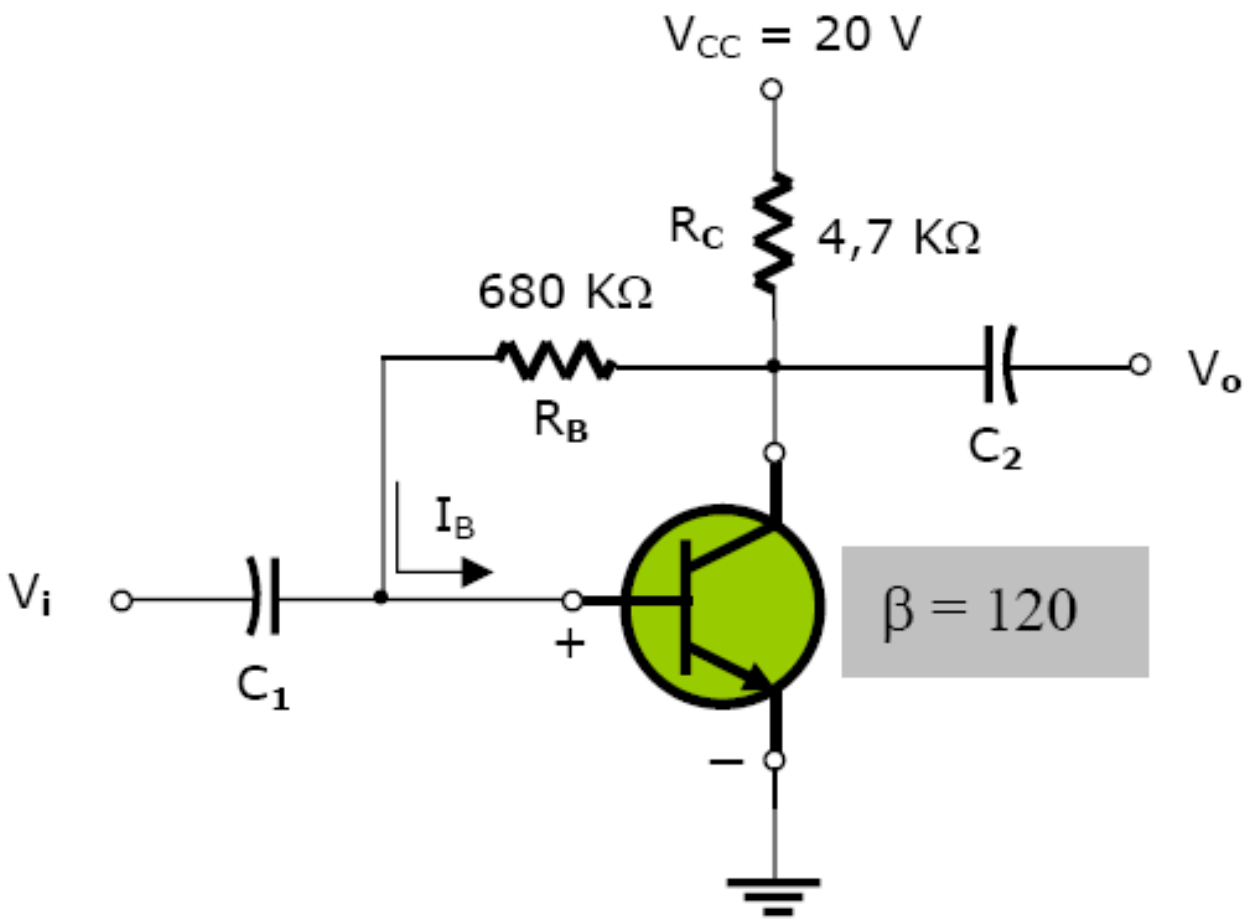
V_{CC} = 20 V
R_C
4,7 KΩ
680 KΩ
R_B
C_2
V_o
I_B
V_i
C_1
+
−
β = 120

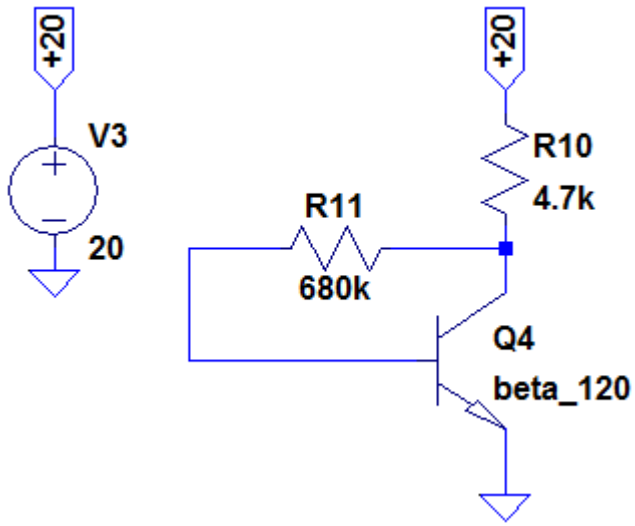


```
       --- Operating Point ---

V(+20):        20              voltage
V(n002):       11.2512         voltage
V(n001):       0.790088        voltage
Ic(Q1):        0.00184607      device_current
Ib(Q1):        1.53839e-005    device_current
Ie(Q1):        -0.00186146     device_current
I(R2):         1.53839e-005    device_current
I(R1):         0.00186146      device_current
I(V1):         -0.00186146     device_current
```

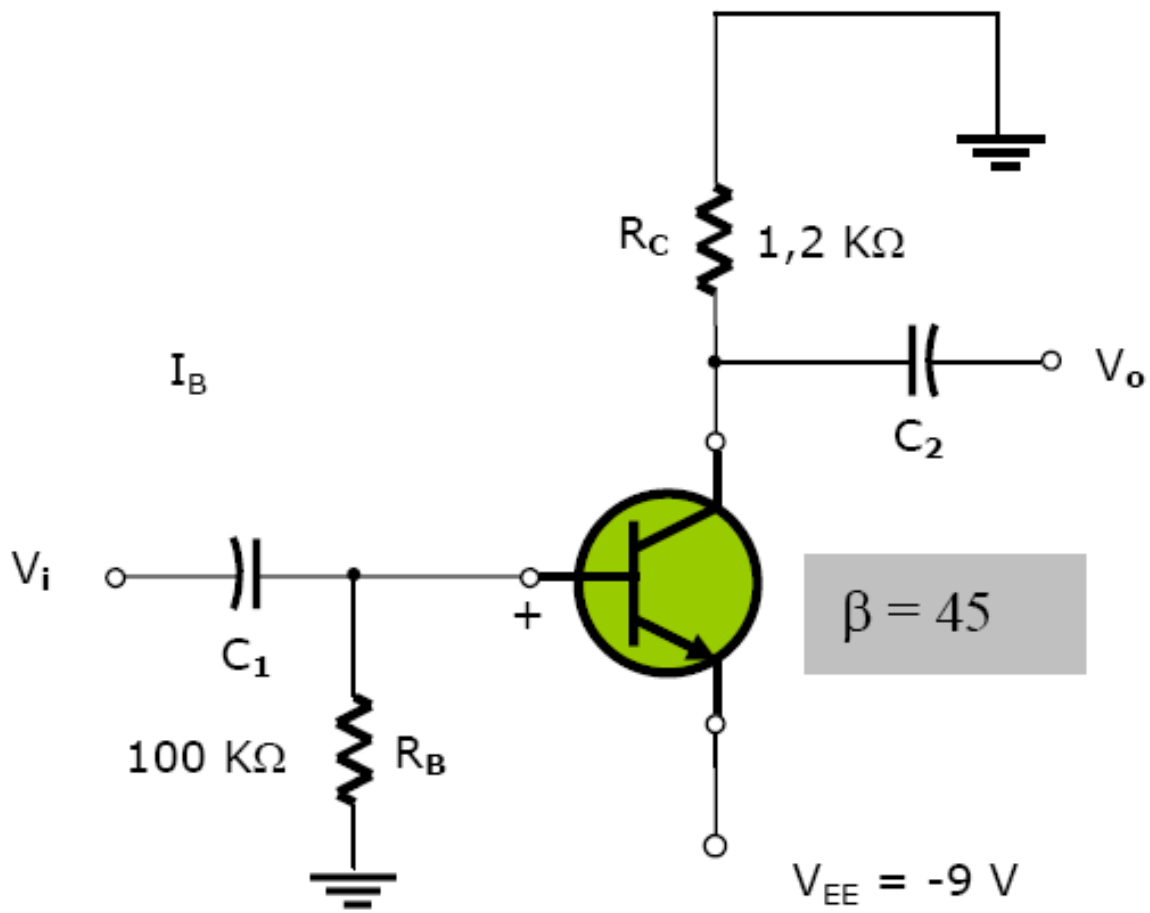
R_C
1,2 KΩ
I_B
V_o
C_2
V_i
C_1
+
β = 45
100 KΩ
R_B
V_{EE} = -9 V

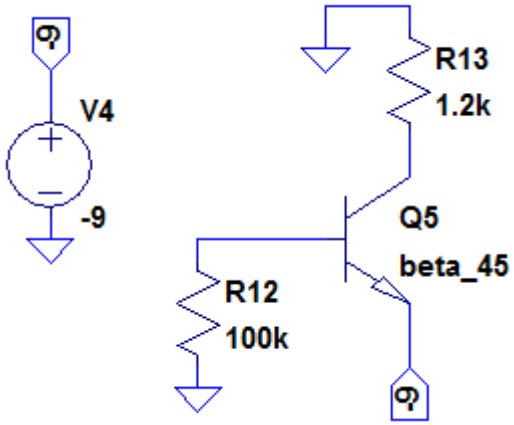


```
       --- Operating Point ---

V(-9):          -9              voltage
V(n002):        -8.19202        voltage
V(n001):        -4.42369        voltage
Ic(Q1):         0.00368641      device_current
Ib(Q1):         8.19202e-005    device_current
Ie(Q1):         -0.00376833     device_current
I(R2):          0.00368641      device_current
I(R1):          -8.19202e-005   device_current
I(V1):          0.00376833      device_current
```

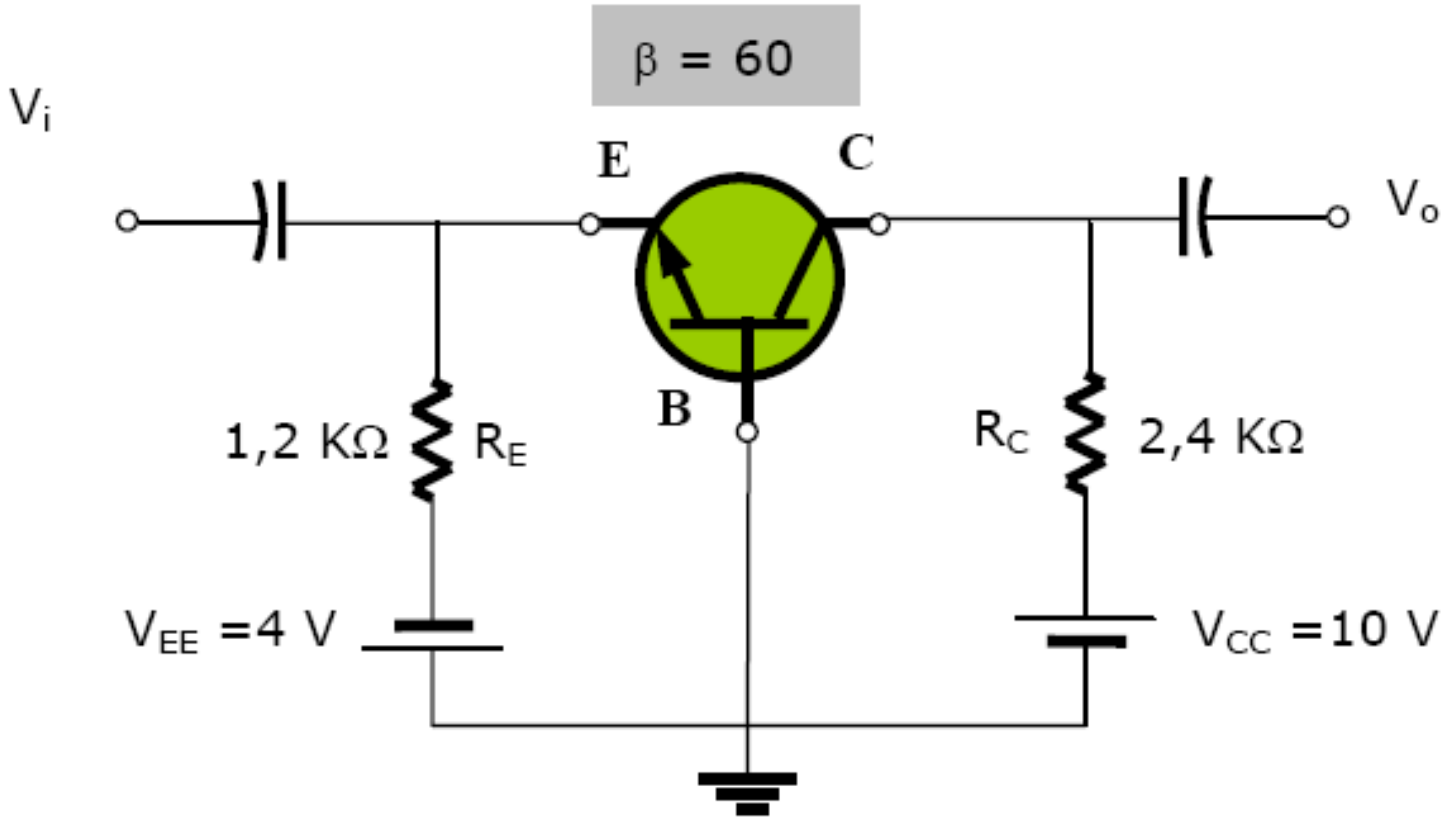
β = 60
Vi
E
C
Vo
B
1,2 KΩ
RE
RC
2,4 KΩ
VEE =4 V
VCC =10 V

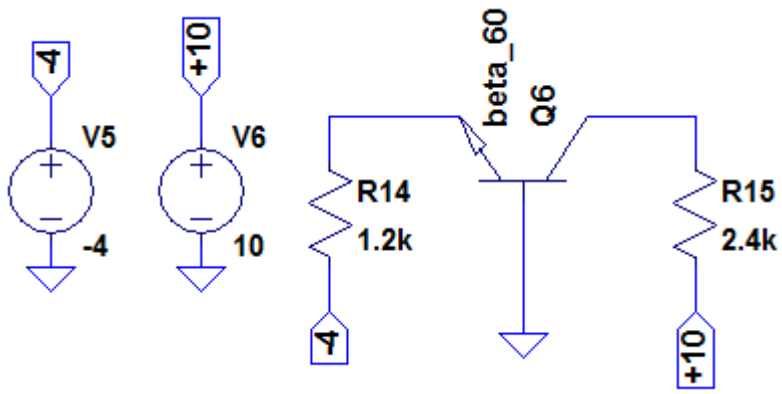


```
--- Operating Point ---

V(n002):        3.7033          voltage
V(n001):        -0.79918        voltage
V(-4):          -4              voltage
V(+10):         10              voltage
Ic(Q1):         0.00262363      device_current
Ib(Q1):         4.37272e-005    device_current
Ie(Q1):         -0.00266736     device_current
I(R2):          -0.00262362     device_current
I(R1):          0.00266735      device_current
I(V2):          -0.00262362     device_current
I(V1):          0.00266735      device_current
```